Stratomaster Blaze 3.125” Template Drawing

FRONT VIEW

ACTUAL SIZE

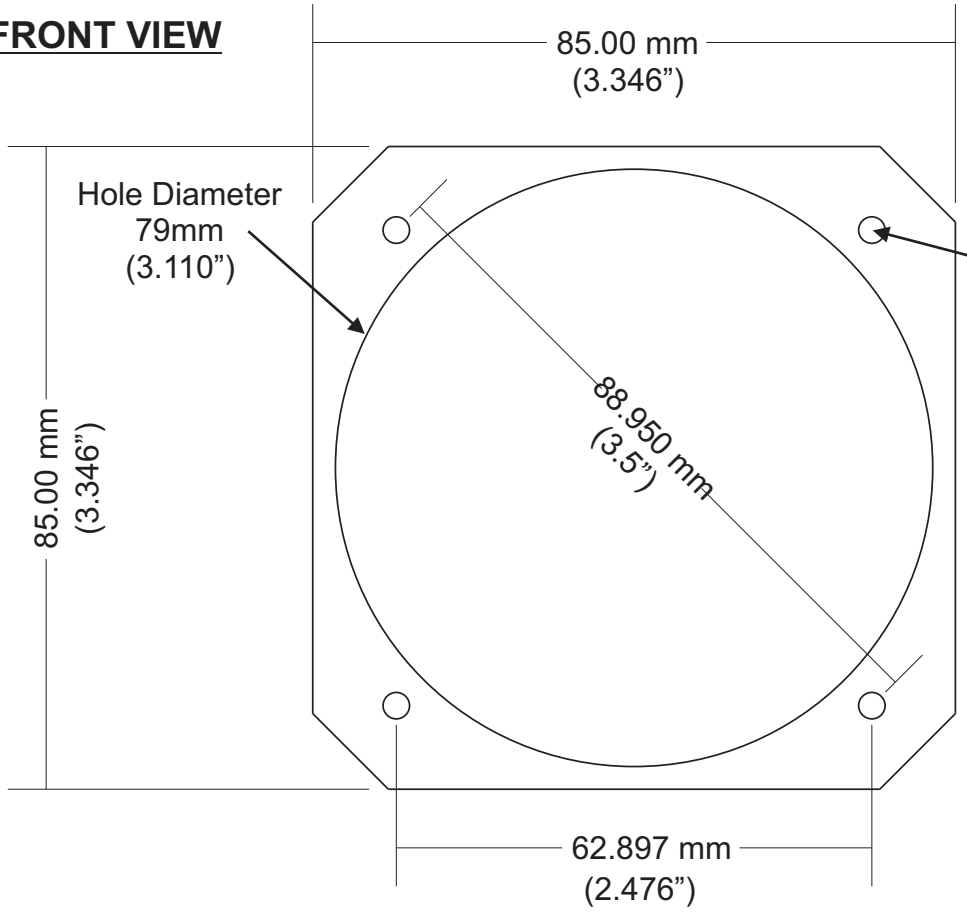

Note:
Actual hole must be cut slightly larger than 79mm (3.110”).

Standard cutout is 3.125”

3mm (0.118”) mounting screws recommended

ACTUAL SIZE
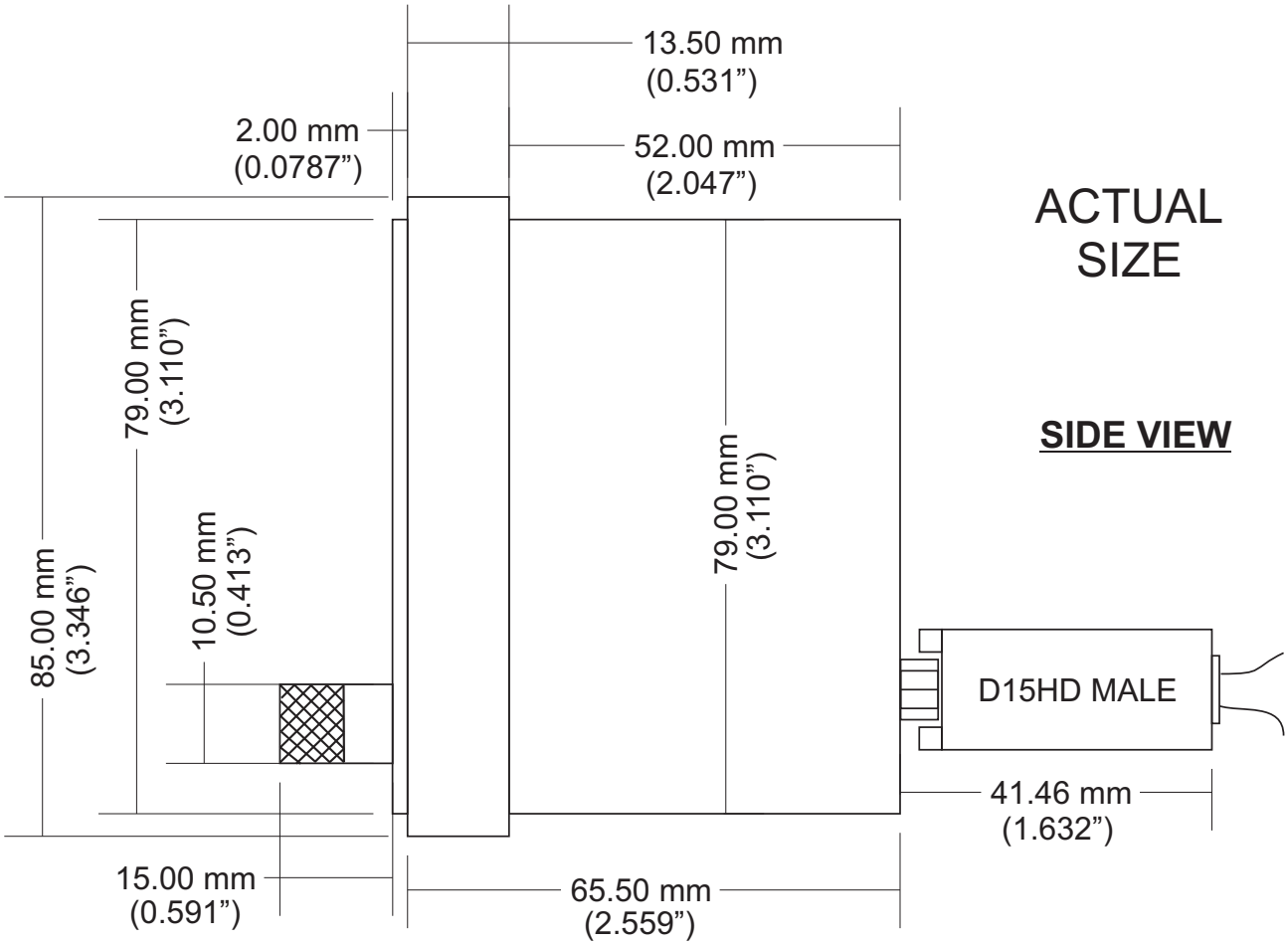
SIDE VIEW